METAGLAS® Sight Glass Flange – Connection to DIN 2501

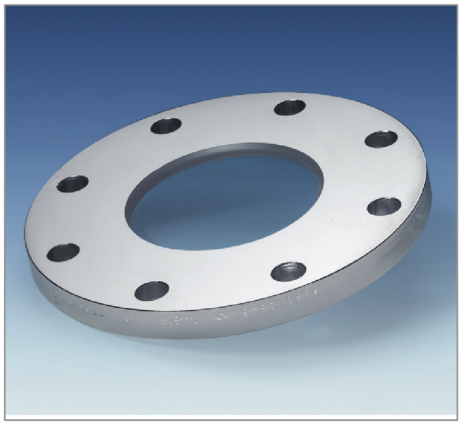

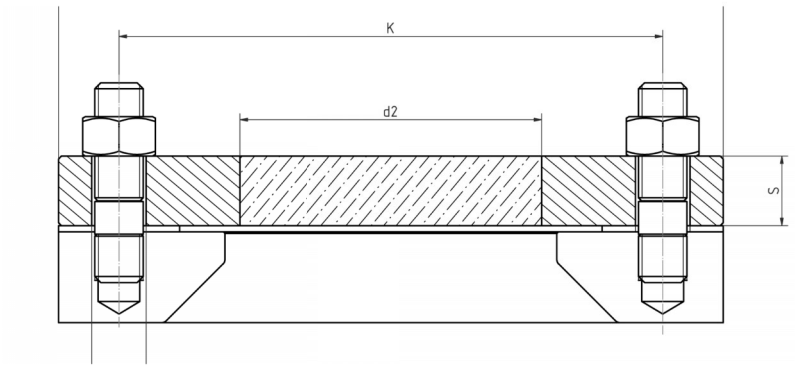

Applications
- Flat face mating flange

Advantages
- Reliability against total failure. The possibility of unexpected rupture is excluded
- Long working time
- Smooth easy clean surface
- Maximum viewing
- Minimum design height

Ring materials	Operating temperature
S355J2+N	-10°C to +300°C
1.4462	-30°C to +280°C
2.4602	-80°C to +300°C
2.4605	-80°C to +300°C
2.4610	-80°C to +300°C

Technical data
Manufactured and tested to:
- Directive for pressure equipment 2014/68/EU, Module H/H1 (DIN/EN/ISO 9001)
- AD2000 Standards W0/TRD 100
- Sight glass fused to metal conforming to DIN 7079
- Materials to VdTÜV specifications and the DIN/EN designated standards
- Glass: Borosilicate to DIN 7080 / DIN 7079

Material certificates
- Certificate of Conformity to EN 10204-3.1 or 3.2

Approvals
- TÜV-Approval in accordance with the governing standards (for pressure vessels) (PN6 to PN40); with Carbon Steel (DIN 1.0570) or Duplex Stainless Steel (DIN 1.4462)

Important
- **Requires parallel flat face mounting flange and full gasket**

PN6	Flange				Glass	Mounting holes			Gasket
	NW	D	K	S	d2	n	Thread	d	
	40	130	100	14	40	4	M12	14	130 x 70 x 2
	50	140	110	14	50	4	M12	14	140 x 85 x 2
	65	160	130	14	70	4	M12	14	160 x 100 x 2
	80	190	150	16	80	4	M16	18	190 x 110 x 2
	100	210	170	16	100	4	M16	18	210 x 130 x 2
	125	240	200	20	120	8	M16	18	240 x 160 x 2
	150	265	225	20	140	8	M16	18	265 x 185 x 2
	200	320	280	20	160	8	M16	18	320 x 240 x 2

METAGLAS
The Only Safe View

PN10	Flange				Glass	Mounting holes			Gasket
	NW	D	K	S	d2	n	Thread	d	
	40	150	110	16	40	4	M16	18	150 x 70 x 2
	50	165	125	18	50	4	M16	18	165 x 85 x 2
	65	185	145	18	70	4	M16	18	185 x 105 x 2
	80	200	160	20	80	8	M16	18	200 x 120 x 2
	100	220	180	20	100	8	M16	18	220 x 140 x 2
	125	250	210	22	120	8	M16	18	250 x 170 x 2
	150	285	240	22	135	8	M20	22	285 x 195 x 2
	200	340	295	28	160	8	M20	22	340 x 250 x 2

PN16	Flange				Glass	Mounting holes			Gasket
	NW	D	K	S	d2	n	Thread	d	
	40	150	110	16	40	4	M16	18	150 x 70 x 2
	50	165	125	18	50	4	M16	18	165 x 85 x 2
	65	185	145	18	70	4	M16	18	185 x 105 x 2
	80	200	160	20	80	8	M16	18	200 x 120 x 2
	100	220	180	20	100	8	M16	18	220 x 140 x 2
	125	250	210	25	120	8	M16	18	250 x 170 x 2
	150	285	240	25	135	8	M20	22	285 x 195 x 2
	200	340	295	28	160	12	M20	22	340 x 250 x 2

PN25	Flange				Glass	Mounting holes			Gasket
	NW	D	K	S	d2	n	Thread	d	
	40	150	110	20	40	4	M16	18	150 x 70 x 2
	50	165	125	20	50	4	M16	18	165 x 85 x 2
	65	185	145	22	70	8	M16	18	185 x 105 x 2
	80	200	160	24	80	8	M16	18	200 x 120 x 2
	100	235	190	26	100	8	M20	22	235 x 145 x 2
	125	270	220	26	120	8	M24	26	270 x 170 x 2
	150	300	250	30	125	8	M24	26	300 x 200 x 2

PN40	Flange				Glass	Mounting holes			Gasket
	NW	D	K	S	d2	n	Thread	d	
	65	185	145	22	70	8	M16	18	185 x 105 x 2
	80	200	160	25	70	8	M16	18	200 x 120 x 2
	100	235	190	30	80	8	M20	22	235 x 145 x 2
	125	270	220	40	100	8	M24	26	270 x 170 x 2
	150	300	250	35	125	8	M24	26	300 x 200 x 2

PN64	Flange				Glass	Mounting holes			Gasket
	NW	D	K	S	d2	n	Thread	d	
	65	205	160	32	65	8	M20	22	205 x 115 x 2
	80	215	170	35	80	8	M20	22	215 x 125 x 2
	100	250	200	40	80	8	M24	26	250 x 150 x 2
	125	295	240	40	100	8	M27	30	295 x 185 x 2

PN100	Flange				Glass	Mounting holes			Gasket
	NW	D	K	S	d2	n	Thread	d	
	65	220	170	32	60	8	M24	26	220 x 120 x 2
	80	230	180	40	70	8	M24	26	230 x 130 x 2
	100	265	210	40	80	8	M27	30	265 x 150 x 2
	125	315	250	45	90	8	M30	33	315 x 185 x 2